Code:	V33L

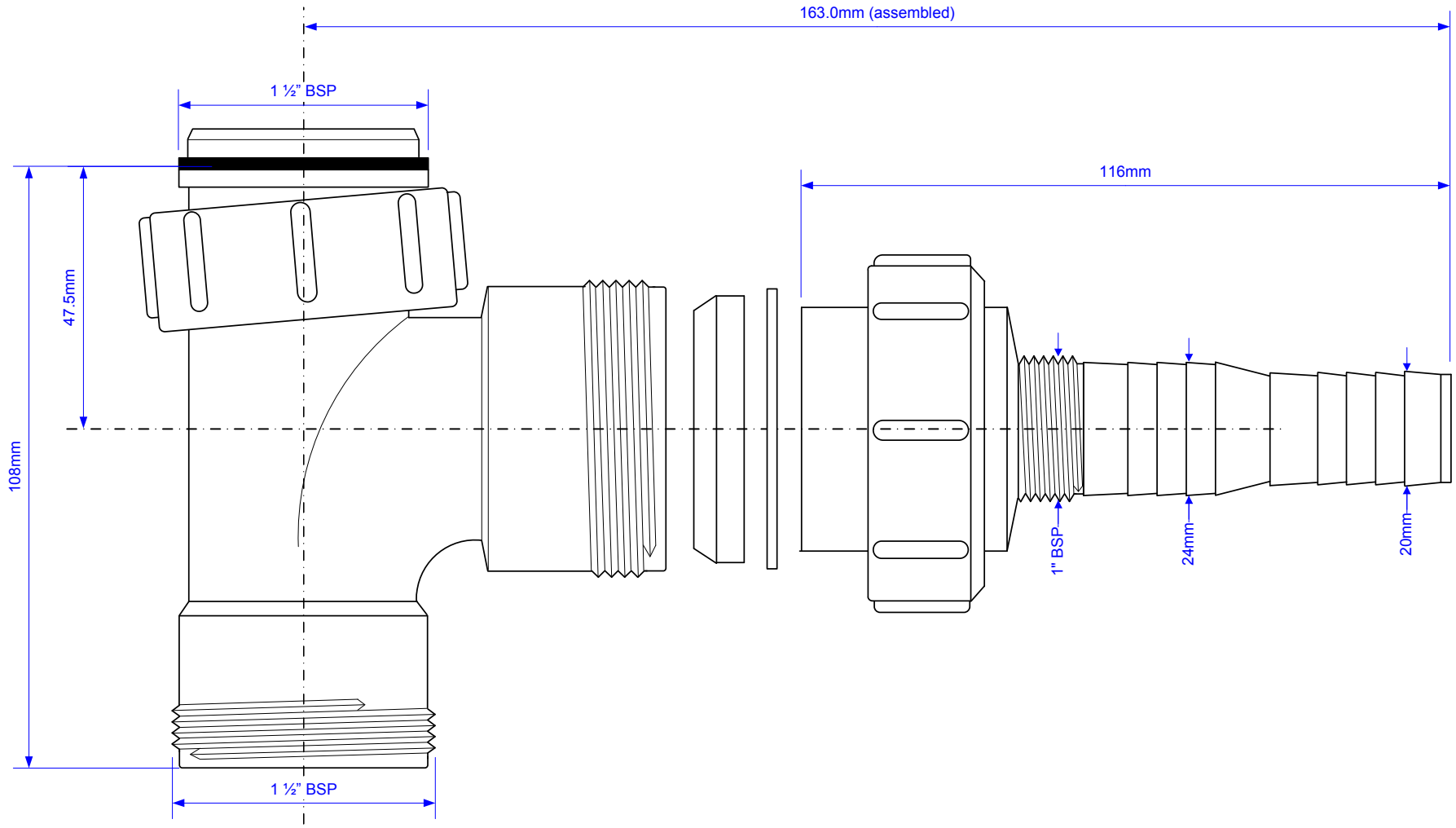

Drawing verified correct as of:	23/05/2007 RM	DRAWN BY RM	REVISED	FILENAME V33L.VSD
			SCALE 1: 1	DATE 23/05/2007